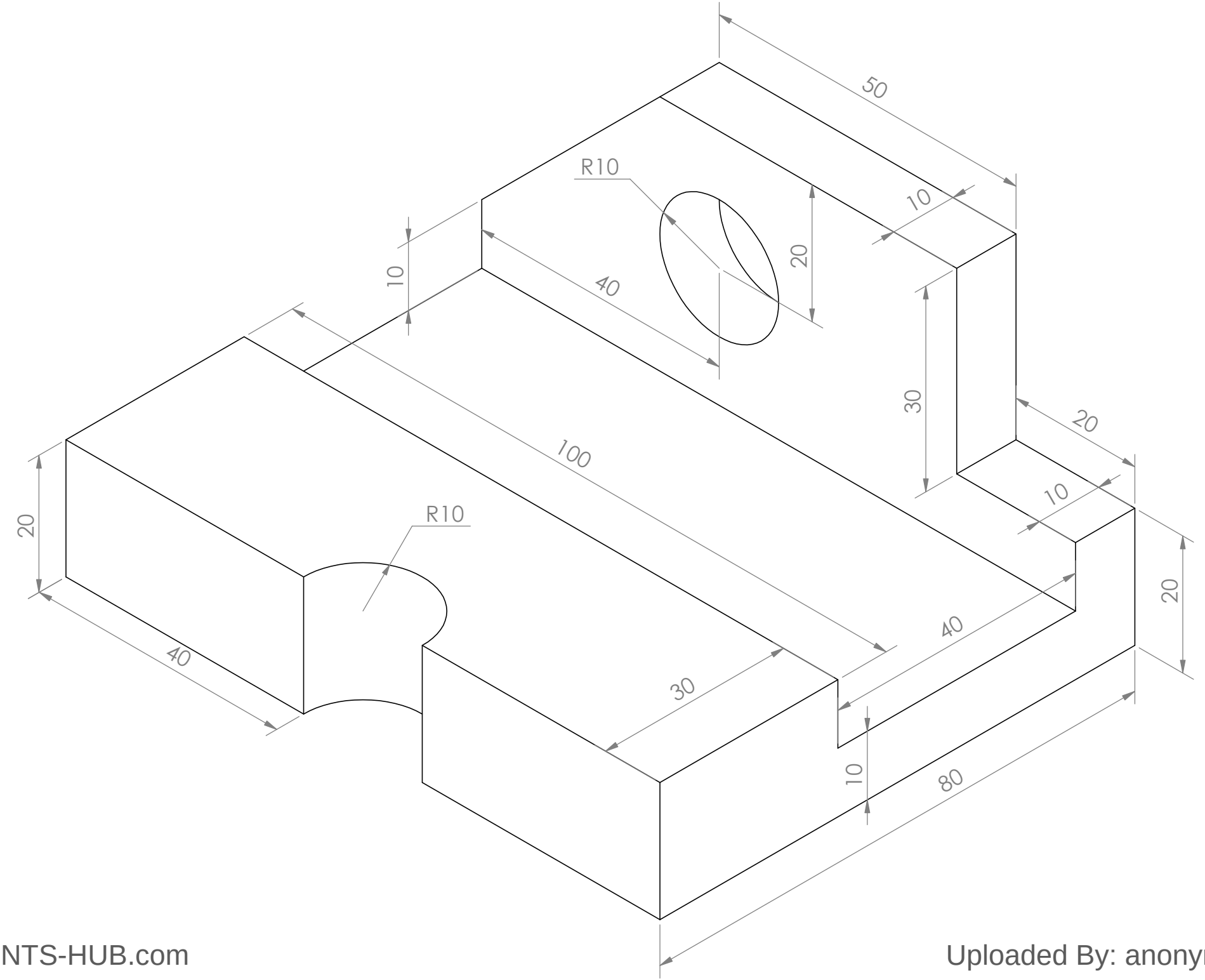

STUDENTS-HUB.com

Uploaded By: anonymous